MAMA GREEN

Glyph
MAMAGREEN Design Lab

GLYPH Bistro Table Square 31.5" / 80 cm (HPL Top | Teak Base)

GLY117

• NOT ACTIVATED • PREVIEW •

Protective cover available

Suitable for rooftop

Suitable for regular items, suitable for more windy areas

Assembly

Partially handcrafted, random imperfections are part of the design

Contains recycled parts, random imperfections are part of the design

DIMENSIONS

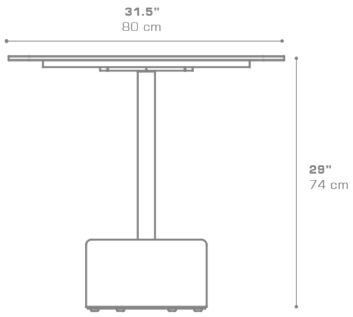

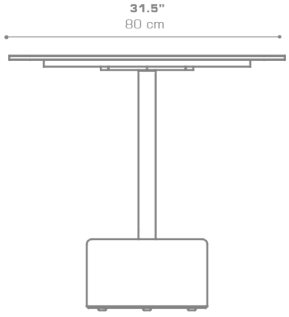

CONFIGURATIONS

FRAME	: Powder Coated Aluminum Ultra Durable
BASE	: Laminated Teak
TOP	: High Pressure Laminate (HPL)

Protective Cover :
GLY102PC Top table only
GLYPC-8 Table + 3 Chairs

PACKING DETAILS

VOL	: 6 ft3 | 0.18 m3
NW	: 62 lb | 28 kg
GW	: 82 lb | 37 kg
PU	: 2 Boxes

DOWNLOAD MATERIALS

Powder Coating Colors
Teak
HPL

ADDITIONAL INFORMATION

3