MAMA GREEN

Glyph
MAMAGREEN Design Lab

# GLYPH Tea Table 23.5" / 60 cm (Alu Top | Stone Base)

GLY25

• NOT ACTIVATED • PREVIEW •

Protective cover available

Suitable for rooftop

Heavier than regular items, suitable for more windy areas

Assembly

## DIMENSIONS

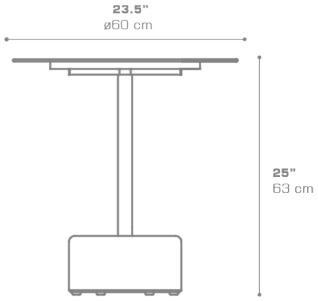


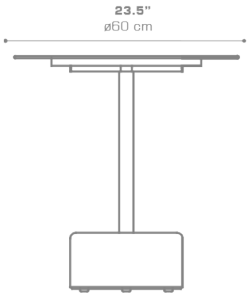


## CONFIGURATIONS

| | | |
|---|---|---|
| FRAME & TOP | : | Powder Coated Aluminum Ultra Durable |
| BASE | : | Stone |

Protective Cover :
GLY01PC Protective Cover

## PACKING DETAILS

| | | |
|---|---|---|
| VOL | : | 7 ft3 \| 0.19 m3 |
| NW | : | 68 lb \| 31 kg |
| GW | : | 88 lb \| 40 kg |
| PU | : | 2 Boxes |

## DOWNLOAD MATERIALS

Powder Coating Colors