MAMA GREEN

munia
MAMAGREEN Design Lab

MUNIA NAYA Curved Modular System
MUN103

• NOT ACTIVATED • PREVIEW •

Protective cover available

Suitable for rooftop

Heavier than regular items, suitable for more windy areas

Partially handcrafted, random imperfections are part of the design

DIMENSIONS

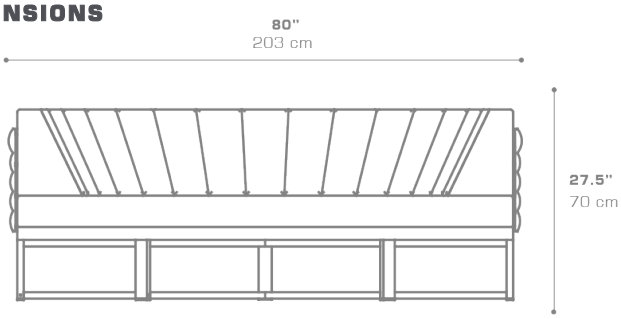

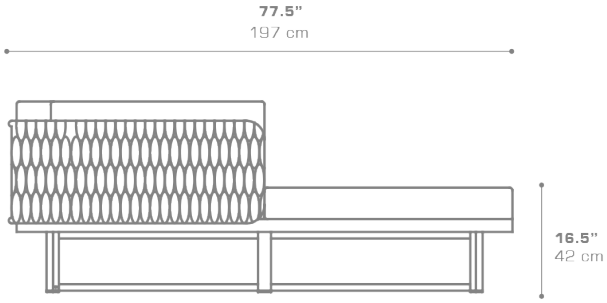

CONFIGURATIONS

FRAME	: Powder Coated Aluminum
SHELL	: Braiding
CUSHION	: Grade A | B | C | D | E

PACKING DETAILS

VOL	: 53 ft3 | 1.51m3
NW	: 71 lb | 32 kg
GW	: 106 lb | 48 kg
PU	: 1 / box
COM	: 6.5 ly

DOWNLOAD MATERIALS

Powder Coating Colors
Textiles
Braiding