MAMA GREEN

Glyph
MAMAGREEN Design Lab

GLYPH Bar Table 23.5" / 60 cm (Alu Top | Stone Base)

GLY28

• NOT ACTIVATED • PREVIEW •

Protective cover available

Suitable for rooftop

Heavier than regular items, suitable for more windy areas

Assembly

DIMENSIONS

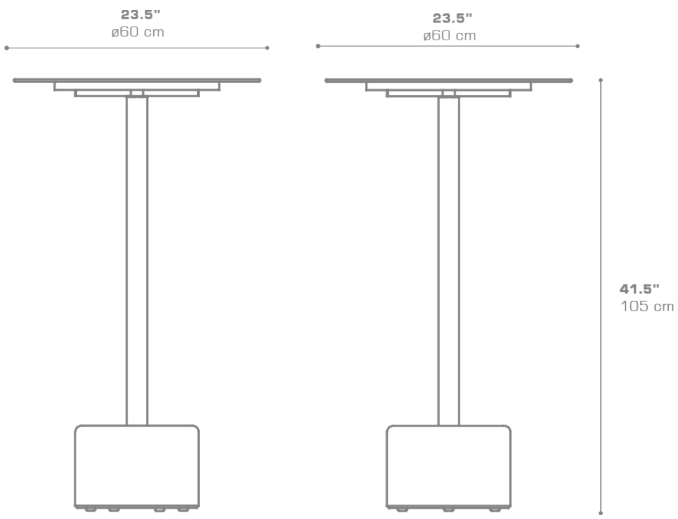

CONFIGURATIONS

FRAME & TOP	: Powder Coated Aluminum Ultra Durable
BASE	: Stone

Protective Cover :
GLY01PC Top table only
GLYPC-3 Table + 2 Bar Chairs

PACKING DETAILS

VOL	: 10 ft3 | 0.28 m3
NW	: 90 lb | 41 kg
GW	: 112 lb | 51 kg
PU	: 2 boxes

DOWNLOAD MATERIALS

Powder Coating Colors

ADDITIONAL INFORMATION

2