MAMA GREEN

Glyph
MAMAGREEN Design Lab

GLYPH Tea Table Square 23.5" / 60 cm (Alu Top | Teak Base)

GLY105

• NOT ACTIVATED • PREVIEW •

Protective cover available

Suitable for rooftop

Suitable for regular items, suitable for more windy areas

Assembly

Partially handcrafted, random imperfections are part of the design

Contains recycled parts, random imperfections are part of the design

DIMENSIONS

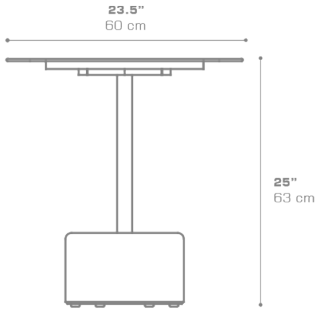

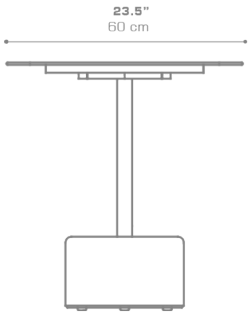

CONFIGURATIONS

FRAME & TOP	:	Powder Coated Aluminum Ultra Durable
BASE	:	Laminated Teak

Protective Cover :
GLY101PC Protective Cover

PACKING DETAILS

VOL	:	4 ft3 | 0.11 m3
NW	:	40 lb | 18 kg
GW	:	55 lb | 25 kg
PU	:	2 Boxes

DOWNLOAD MATERIALS

Powder Coating Colors
Teak