MAMA GREEN

ARO
MAMAGREEN Design Lab

ARO Divider Model B (Rope weaving)
ARO3

• NOT ACTIVATED • PREVIEW •

Protective cover available

Suitable for rooftop

Heavier than regular items, suitable for more windy areas

Assembly

DIMENSIONS

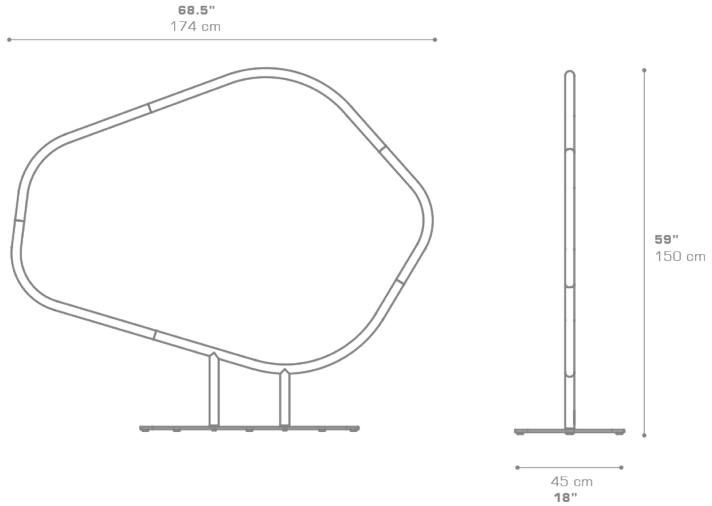

CONFIGURATIONS

FRAME : Powder Coated Aluminum

PACKING DETAILS

VOL	:	16.5 ft3 | 0.47 m3
NW	:	88 lb | 40 kg
GW	:	121 lb | 55 kg
PU	:	2 Boxes

DOWNLOAD MATERIALS

Powder Coating Colors

Rope Weave